4. SYSTEM IMPLEMENTATION (HARDWARE & SOFTWARE)

4.1 Circuit Diagram :

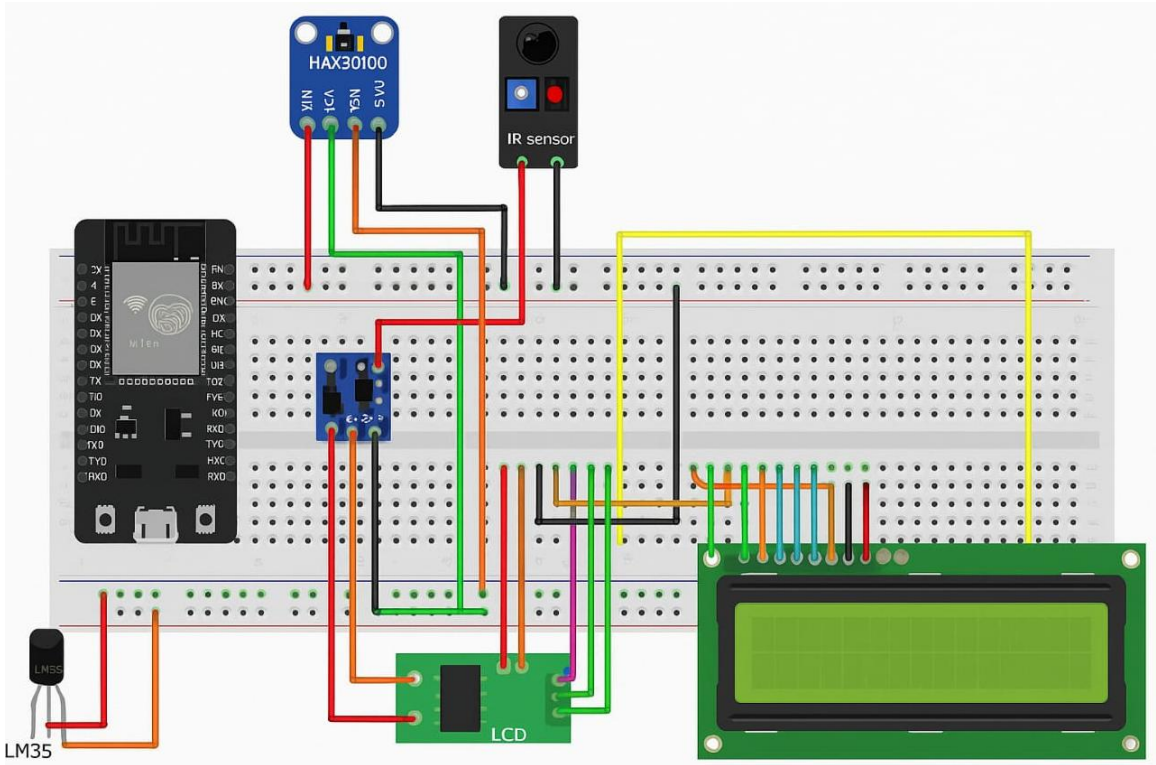

Figure 4.1 Circuit Diagram

The circuit diagram represents the complete hardware interconnection of all components used in the GlucoVitals system. It illustrates how the sensors, display unit, and alert modules are interfaced with the ESP32 microcontroller for continuous health monitoring.

4.1.1 Power Supply Section

- The entire circuit is powered by a 5V DC power supply or USB connection to the ESP32.
- The ESP32 regulates the voltage for all connected modules.
- Common Ground (GND) is shared across all components to maintain a stable reference voltage and proper signal flow